9.1 Spare parts drawing for SG/SGM 100/200 Materials

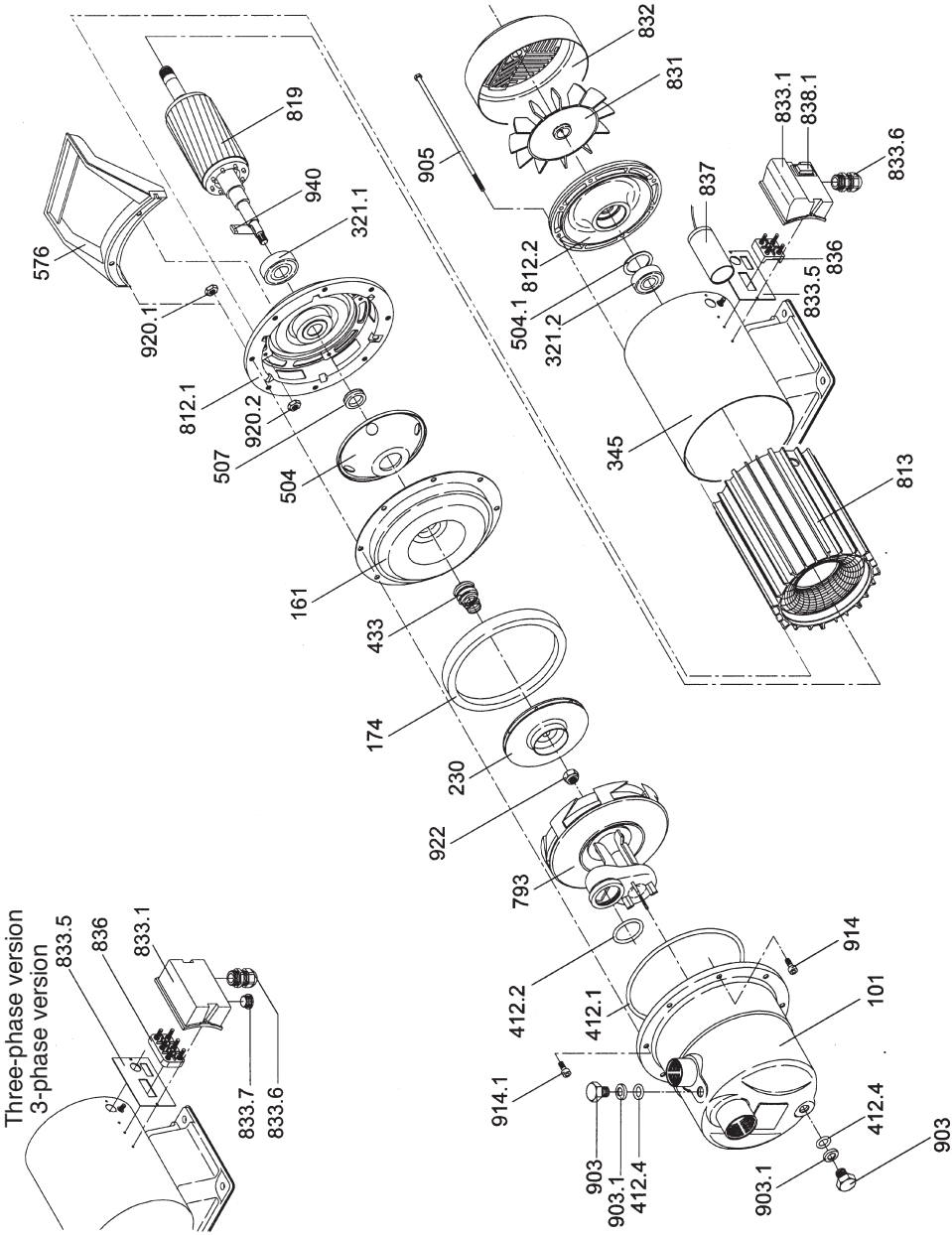

9.2 Spare parts list for SG/SGM 100/200

Part No.	Quantity	Designation	Materials
101	1	Housing	Stainless steel
161	1	Gland housing	Stainless steel
174	1	Spacer ring	Plastic
230	1	Impeller	Stainless steel
321.1	1	Ball bearing 6203 2 RS 1 (A end)	
321.2	1	Ball bearing 6203 2 RS 1 (B end)	
345	1	Motor carrier with pump base	Stainless steel
412.1	1	O-ring for housing, 164.70 x 3.53 mm	Perbunan
412.2	1	O-ring for nozzle housing, 34.60 x 2.62 mm	Perbunan
412.4	2	O-ring for screwed plug 13.10 x 2.62 mm	Perbunan
433	1	Mechanical seal	
504	1	Spacer	Stainless steel
504.1	1	Spacer ring	
507	1	Splash ring	Rubber
576	1	Handle only for AC	Plastic
793	1	Nozzle housing with diffuser insert	Plastic
812.1	1	A end bearing plate	Stainless steel
812.2	1	B end bearing plate	Aluminium
813	1	Motor housing with stator	Aluminium
819	1	Motor shaft with rotor package	
824	1	Connecting cable with plug, 1.5 m only for AC (not shown)	H 07 RN-F
831	1	Fan	Plastic
832	1	Fan cover	Stainless steel
833.1	1	Terminal box cover	
833.5	1	Seal for terminal box cover	
833.6	1	Cable entry gland	
833.7	1	Blind plug only for 3-phase	
836	1	Terminal strip	
837	1	Condenser, only for AC 16 μF SGM 100 20 μF SGM 200	
838.1	1	ON-OFF switch, only for AC	
903	2	Screwed plug	Stainless steel
903.1	2	Disk	Stainless steel
905	4	Motor clamping screw, M 5 x 142 SG/SGM 100 M 5 x 175 SG/SGM 200	
914	8/6	Screw, M 6 x 12	A2 - 70
914.1	2	Screw, M 6 x 25, only for AC	A2 - 70
920.1	8	Hexagon nut M 6	A2 - 70
920.2	4	Hexagon nut M 5	A2 - 70
922	1	Impeller nut M 10 x 1.25	Stainless steel
940	1	Shaft key 4 x 4 x 14 mm	Stainless steel

Subject to technical modifications!